<u>Pole Guard Installation Instructions</u>

Important Note: This product is to be installed by, and only by, Journeyman Lineman.

The materials for the installation of (1) Pole Guard consists of the following:

a. (2) Plate halves
b. (14) Roller halves
c. (4) Plastic fasteners
d. (4) Maze, double hot-dipped zinc coated, rust proof headless 9" nails
e. (1) 38" P&C Flex® corrugated gray flexible, sunlight resistant, 1.5" conduit
f. (1) Standard 1.5" coupling
g. (12) Panduit tie straps
h. (1) Recommended 40" measuring "Wrap-Around" supplied by others & plumbers glue.

1. Assemble the (7) rollers from the 14 roller halves on the ground. This will save installation time.

2. Locate place on pole for the pole guard installation. The position on the pole must be free of any near by object by which the critter may grab or swing from. Observe such items as conduits, anchors, pole climbing spikes, etc. The pole guard should be installed a minimum of 12 feet above the ground.

3. Apply measuring "wrap-around" to pole at the proposed location for the pole guard. Use the table below to verify information for installation. If the pole diameter is less than 10 inches, P&C Flex is required to fill the gap between the plate and the pole, to maintain less than 1-inch clearance all around the pole. (The "wrap-around gives the ability to locate nails at equidistant locations while maintaining a flat surface for which the plate to sit.)

   - If you do not have a "wrap-around", the P&C Flex conduit should be cut to the proper diameter and connected with the 1.5" coupling. **Glue is recommended.** This gives a flat plane to accurately "eyeball" proper nail locations as mentioned in # 4 below. We also recommend fitting the P&C conduit first. This will decrease installation time once the Pole Guard Plate is installed.

4. Mark the four 9-inch nail locations at the wrap-around distances from the table. (Each at 90° angles for equal distance between nails.)

   - If you do not have a "wrap-around", level the P&C conduit and mark nail locations directly below the material, each at 90° distances as described in the table below.

5. Place the nails perpendicular to the pole for mounting. (Figure 1) Drive the nails into pole to the initial depth as shown in the table (3.75”). See table below.

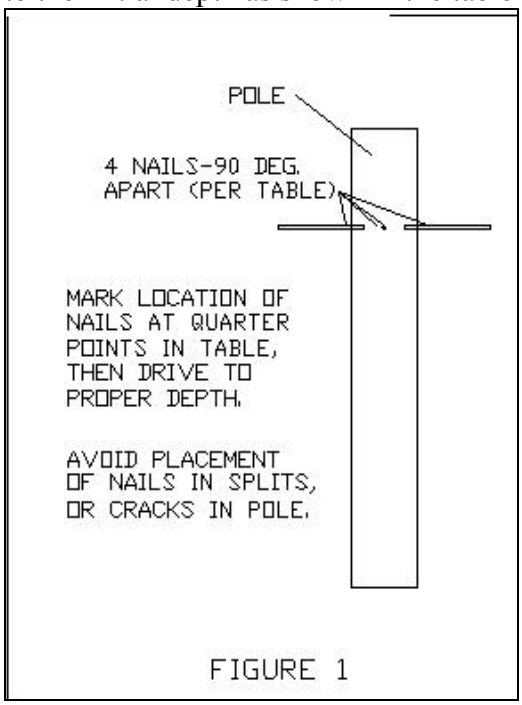

FIGURE 1

6. Assemble the two halves of the plate above the nails and directly blow the P&C conduit. Cut out openings into plate for any conduit passage. Align the holes and press in the fasteners as shown in Figure 2.

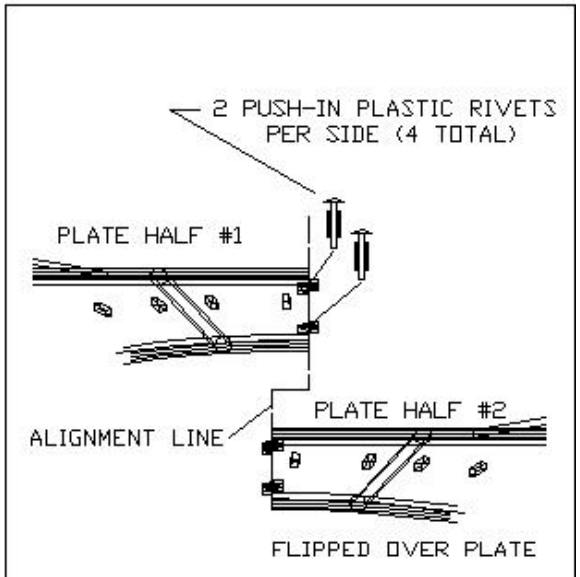

FIGURE 2

7. Place the plate onto the nails and align plate to have equal gap distance to the pole.

8. After positioning is set, drive nails to their final depth against the plate outer rim.

9. Fasten plate to nails with wire ties as shown in Figure 3.

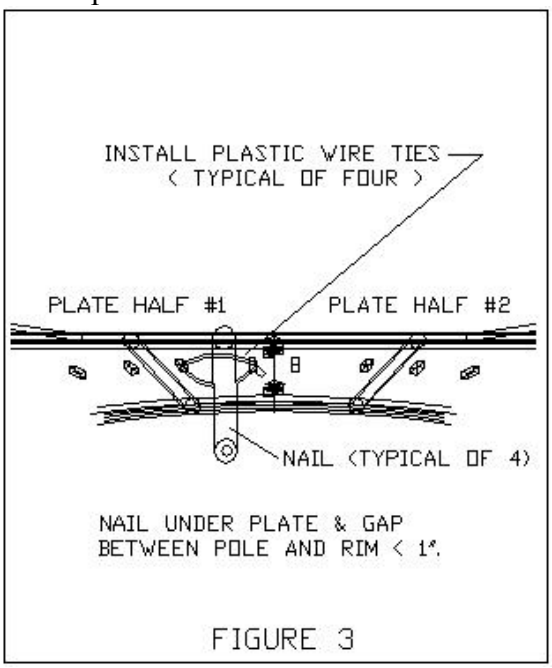

FIGURE 3

10. Fasten P&C Flex conduit to the plate with (6) cable ties.
11. Snap together (7) rollers into the seven locations on the plate.

Pole Guard Installation Table (In Inches)							
Measured Pole Circumference	Calculated Pole Diameter	Calculated Pole Radius	Nail Length	Plate Rim Length	Initial Drive Depth	Nail Quarter Points Distance	Fill Gap Distance
37.7	12.0	6.00	9.00	5.25	3.75	9.4	0.13
36.1	11.5	5.75	9.00	5.25	3.75	9.0	0.63
34.6	11.0	5.50	9.00	5.25	3.75	8.6	1.13
33.0	10.5	5.25	9.00	5.25	3.75	5.3	1.63
31.4	10.0	5.00	9.00	5.25	3.75	7.9	2.13
29.9	9.5	4.75	9.00	5.25	3.75	7.5	2.63
28.3	9.0	4.50	9.00	5.25	3.75	7.0	3.13
26.7	8.5	4.25	9.00	5.25	3.75	6.7	3.63
25.1	8.0	4.00	9.00	5.25	3.75	6.3	4.13